Freescale Semiconductor
User's Guide

Document Number: KTCM0902UG
Rev. 1.0, 1/2015

KIT33CM0902EFEVB and KIT34CM0902EFEVB Evaluation Board

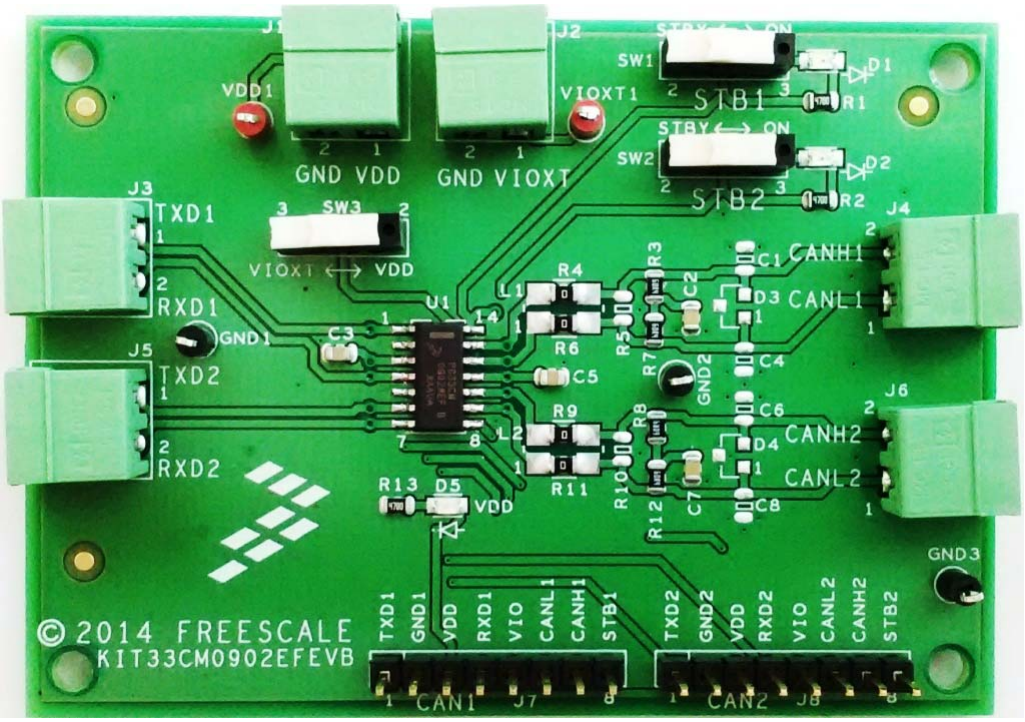

Figure 1. KIT33CM0902EFEVB

© Freescale Semiconductor, Inc., 2015. All rights reserved.

Table of Contents

1 Important Notice . . . 3
2 Getting Started . . . 4
3 Getting to Know the Hardware . . . 5
4 Setting up the Hardware . . . 9
5 Schematic . . . 12
6 Board Layout . . . 13
7 Bill of Materials . . . 14
8 References . . . 16
9 Revision History . . . 17

1 Important Notice

Freescale provides the enclosed product(s) under the following conditions:

This evaluation kit is intended for use of ENGINEERING DEVELOPMENT OR EVALUATION PURPOSES ONLY. It is provided as a sample IC pre-soldered to a printed circuit board to make it easier to access inputs, outputs, and supply terminals. This evaluation kit may be used with any development system or other source of I/O signals by simply connecting it to the host MCU or computer board via off-the-shelf cables. Final device in an application will be heavily dependent on proper printed circuit board layout and heat sinking design as well as attention to supply filtering, transient suppression, and I/O signal quality.

The goods provided may not be complete in terms of required design, marketing, and or manufacturing related protective considerations, including product safety measures typically found in the end product incorporating the goods. Due to the open construction of the product, it is the user's responsibility to take any and all appropriate precautions with regard to electrostatic discharge. In order to minimize risks associated with the customers applications, adequate design and operating safeguards must be provided by the customer to minimize inherent or procedural hazards. For any safety concerns, contact Freescale sales and technical support services.

Should this evaluation kit not meet the specifications indicated in the kit, it may be returned within 30 days from the date of delivery and will be replaced by a new kit.

Freescale reserves the right to make changes without further notice to any products herein. Freescale makes no warranty, representation or guarantee regarding the suitability of its products for any particular purpose, nor does Freescale assume any liability arising out of the application or use of any product or circuit, and specifically disclaims any and all liability, including without limitation consequential or incidental damages. “Typical” parameters can and do vary in different applications and actual performance may vary over time. All operating parameters, including “Typical”, must be validated for each customer application by customer’s technical experts.

Freescale does not convey any license under its patent rights nor the rights of others. Freescale products are not designed, intended, or authorized for use as components in systems intended for surgical implant into the body, or other applications intended to support or sustain life, or for any other application in which the failure of the Freescale product could create a situation where personal injury or death may occur.

Should the Buyer purchase or use Freescale products for any such unintended or unauthorized application, the Buyer shall indemnify and hold Freescale and its officers, employees, subsidiaries, affiliates, and distributors harmless against all claims, costs, damages, and expenses, and reasonable attorney fees arising out of, directly or indirectly, any claim of personal injury or death associated with such unintended or unauthorized use, even if such claim alleges that Freescale was negligent regarding the design or manufacture of the part. Freescale™ and the Freescale logo are trademarks of Freescale Semiconductor, Inc. All other product or service names are the property of their respective owners. © Freescale Semiconductor, Inc. 2015

2 Getting Started

2.1 Kit Contents/Packing List

The KIT33CM0902EFEVB and KIT34CM0902EFEVB contents include:

- Assembled and tested evaluation board/module in an anti-static bag
- Warranty card

2.2 Jump Start

Freescale's analog product development boards help to easily evaluate Freescale products. These tools support analog mixed signal and power solutions including monolithic ICs using proven high-volume SMARTMOS mixed signal technology, and system-in-package devices utilizing power, SMARTMOS and MCU dies. Freescale products enable longer battery life, smaller form factor, component count reduction, ease of design, lower system cost and improved performance in powering state of the art systems.

- Go to www.freescale.com/analogtools
- Locate your kit
- Review your Tool Summary Page
- Look for

Jump Start Your Design

- Download documents, software, and other information

Once the files are downloaded, review the user guide in the bundle. The user guide includes setup instructions, BOM and schematics. Jump start bundles are available on each tool summary page with the most relevant and current information. The information includes everything needed for design.

2.3 Required Equipment and Software

To use this kit, you need:

- 5.0 V power supply, 150 mA capability
- 3.3 V power supply, 50 mA capability. Usage of this second supply depends on the user requirement
- Signal generator, output frequency up to 1.0 MHz and output voltage at least 5.0 V
- An optional oscilloscope to monitor the CAN signals
- Cables with pluggable terminal blocks 2 position (i.e. Phoenix Contact 1803578)

2.4 System Requirements

The kit requires the following:

- USB-enabled PC with Windows® XP or higher

3 Getting to Know the Hardware

3.1 Board Overview

This evaluation board allows the user to implement and test the functionality of the CM0902, Dual High Speed CAN transceiver. The CM0902 comes in two variants:

- MC33CM0902WEF for Automotive applications, used with KIT33CM0902EFEVB
- MC34CM0902WEF for Industrial applications, used with KIT34CM0902EFEVB

3.2 Board Features

The KIT33CM0902EFEVB Evaluation Board is an easy-to-use circuit board that allows the user to exercise the function of the CM0902, Dual High Speed CAN transceiver.

- Supply from a single 5.0 V, or dual 5.0 V and 3.3 V supplies
- Local switches for single or dual supply selection
- Switches for device operating mode selection
- Footprint for optional CAN bus filter and protection component
- Two 8-pin Single In Line connector to access CM0902 device pins
- Three LEDs to display board and CM0902 state

3.3 Device Features

This evaluation board features the following Freescale product:

Table 1. CM0902 Device Features

Device	Description	Features
MC33CM0902 or MC34CM0902	Dual High Speed CAN Transceiver	• Stand Alone High Speed CAN transceiver • Two independent channels • Operates with 5.0 V or 3.3 V MCU • Normal mode and standby mode with remote CAN wake-up • TXD dominant timeout (MC33CM0902 only)

3.4 Board Description

- The board is supplied from a unique 5.0 V supply, connected to the GND and VDD plugs. In this case, the SW3 switch is positioned right (single power supply)
- An additional 3.3 V supply is connected to the GND and VIO plugs. In this case, the SW3 switch is positioned left (dual power supply)
- A signal generator is connected to the GND and TXDx plugs (TXD1 and TXD2)
- An oscilloscope is connected to the CANHx and CANLx plugs, and optionally to RXDx and TXDx

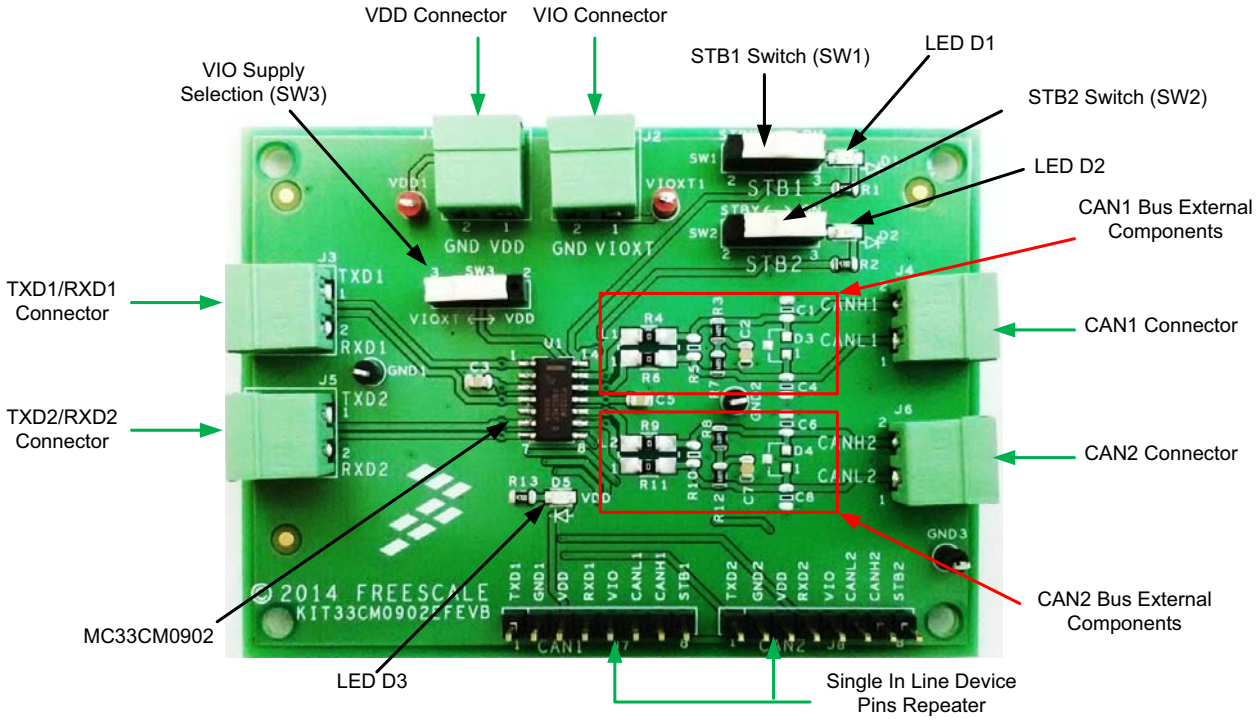

Figure 2. Board Description

Table 2. Board Description

Name	Description
VIO Connector	• To connect VIO supply
VDD Connector	• To connect VDD supply
VIO Supply Selection (SW3)	• To select single power supply or dual power supply
TXD1/RXD1 Connector	• To send TXD1 and read RXD1
TXD2/RXD2 Connector	• To send TXD2 and read RXD2
MC33CM0902	• CM0902 device (MC33CM0902 in this example)
LED D3	• To indicate device is powered with VDD
Single In Line Device Pins Repeater	• Extra connectors to access signals of CM0902
CAN2 Bus External Components	• Bus termination and optional filters
CAN2 Connector	• Connector to CANH2 and CANL2
CAN1 Connector	• Connector to CANH1 and CANL1

Table 2. Board Description (continued)

Name	Description
CAN1 Bus External Components	• Bus termination and Optional filters
LED D2	• To indicate channel CAN2 is in normal mode
STB2 Switch (SW2)	• To select CAN2 operating mode (normal or standby)
LED D1	• To indicate channel CAN1 is in normal mode
STB1 Switch (SW1)	• To select CAN1 operating mode (normal or standby)

Table 3. Jumper and Switch Settings

Device Mode	Board Supply	STB1/2 Switch	VIOXT - VDD Switch	D1/2	D3	Comment
Standby	Single	Left	Right	OFF	ON	Device in Standby mode. Single power supply. No CAN path from TXDx to bus. Bus wake-up reported on RXDx
Normal	Single	Right	Right	ON	ON	Device in Normal mode. Single power supply. CAN path from TXDx to bus and from bus to RXDx
Standby	Dual	Left	Left	OFF	ON	Device in Standby mode. Dual power supply. No CAN path from TXDx to bus. Bus wake-up reported on RXDx
Normal	Dual	Right	Left	ON	ON	Device in Normal mode. Dual power supply. CAN path from TXDx to bus and from bus to RXDx

3.5 CAN Bus Termination Configuration

The board allows multiple variations for the mounting and usage of the external components. Figure 3 shows multiple options.

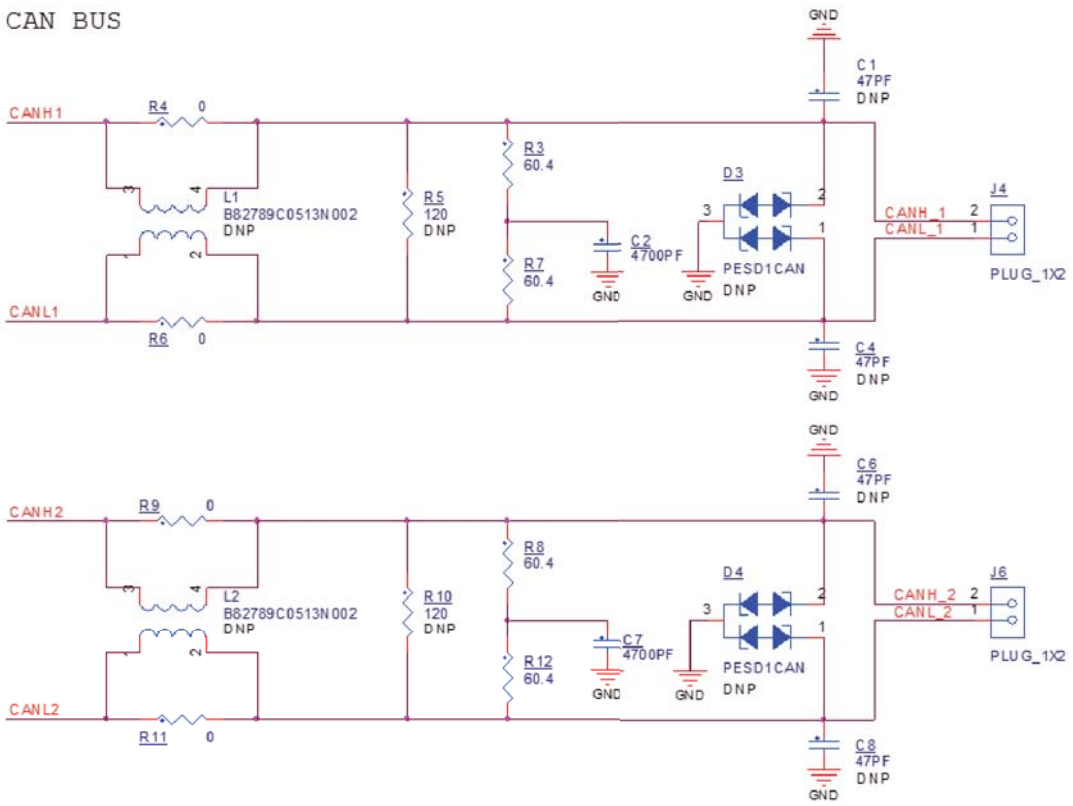

Figure 3. CAN Bus Termination

3.6 External Component Definition

This section defines the purpose and usage of the CAN bus termination components:

- R3 (R8), R5 (R10), R7 (R12), and C2 (C7): bus termination option (no termination, 60 Ω, 120 Ω, or split termination)
- R4 (R9), R6 (R11), and L1 (L2): common mode choke utilization
- C1 (C6), C4 (C8), and D3 (D4): extra bus filter and ESD protection

Table 4: External Component Definition

Use Case	R5 (R10)	R3 (R8), R7 (R12), C2 (C7)	R4 (R9), R6 (R11), L1 (L2)	C1 (C6), C4 (C8)	D3 (D4)
No Termination	Do Not Populate	Do Not Populate	-	-	-
60 Ω or 120 Ω Termination	Populate with R5 = 60 Ω or R5 = 120 Ω	Do Not Populate	-	-	-
Split Termination (R3, R4, C2)	Do Not Populate	Populate with R3 = R7 = 60 Ω, C2 = 4.7 nF (example only)	-	-	-
Without Common Mode Choke	-	-	Populate R4 and R6 with 0 Ω	-	-
With Common Mode Choke	-	-	Do Not Populate R4 and R6 Populate L1 (example 51 uH)	-	-
Extra Bus Filter	-	-	-	Populate with 100 pF (example)	-
Extra ESD Protection	-	-	-	-	Populate with NUP2105 (example)

4 Setting up the Hardware

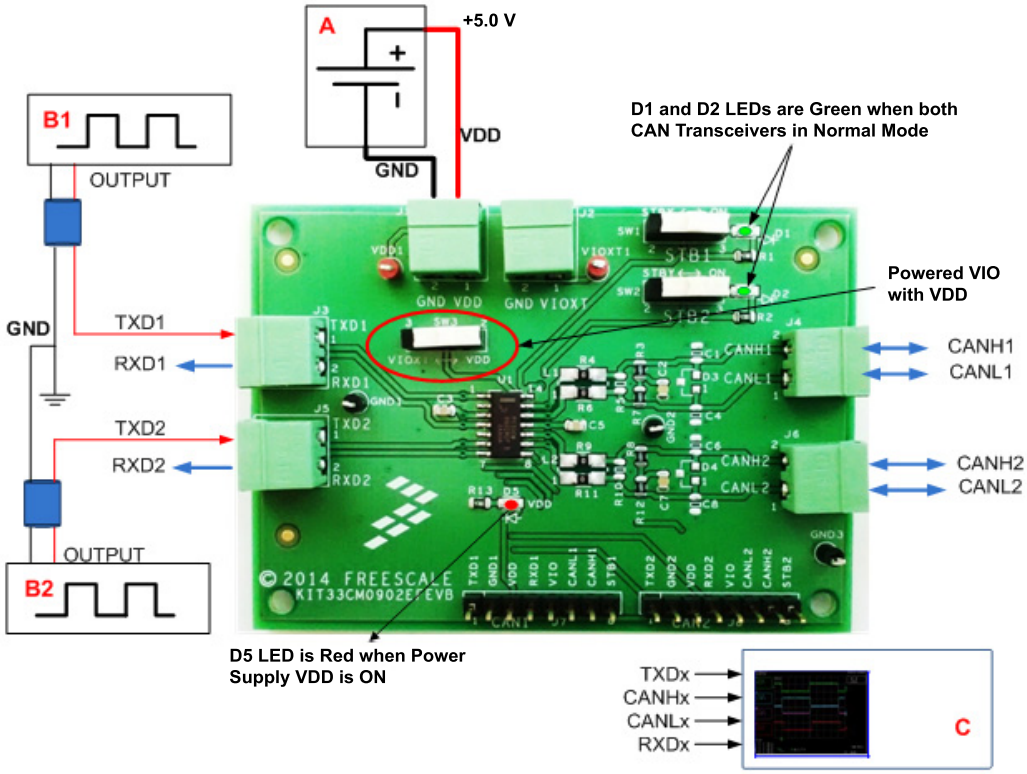

A: 5.0 V/200 mA Power Supply
B1 and B2: Signal Generator: 0 V - 5.0 V, 250 kHz square wave, 50% duty cycle
C: Oscilloscope

Figure 4. KIT33CM0902EFEVB Board Setup with Single Power Supply

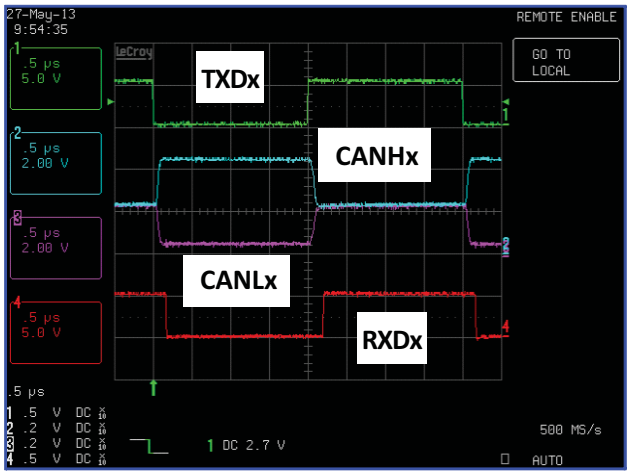

Figure 5. Output Signals

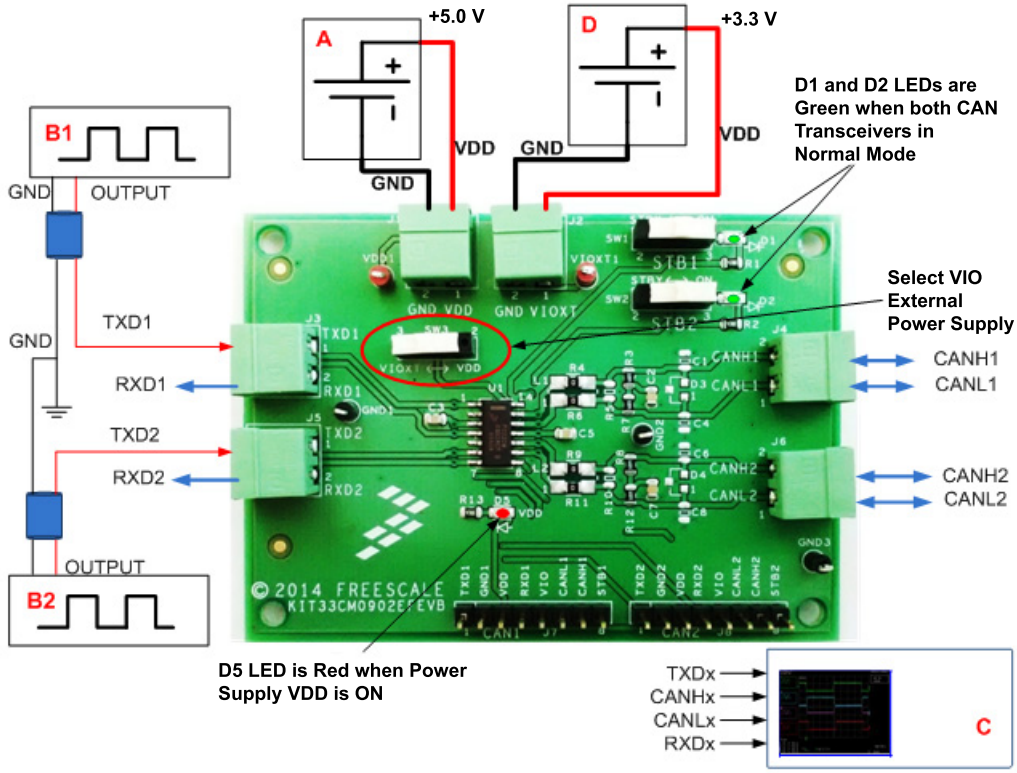

A: 5.0 V/150 mA Power Supply
B1 and B2: Signal Generator: 0 V - 3.3 V, 250 kHz square wave, 50% duty cycle
C: Oscilloscope
D: 3.3 V/50 mA Power Supply

Figure 6. KIT33CM0902EFEVB Board Setup with Dual Power Supply

4.1 Setting up the Hardware using Single Supply

1. To use the board and device with a single supply, set the SW3 switch to right (on VDD).
2. Set the power supply to 5.0 V.
3. To use the device in Normal mode, set the STBx switch to right.
   - Connect a 0 V - 5.0 V square signal to TXDx, frequency 250 kHz and duty cycle 50%
   - Connect an oscilloscope to CANHx, CANLx, and RXDx terminals
   - Observe CANHx, CANLx and RXDx signals on the oscilloscope
4. To use the device in Standby mode, set the STBx switch to left.
   - Observe TXDx signal on the oscilloscope. In Standby mode, TXDx signal is high
   - Apply CAN signal on CANHx and CANLx
   - RXDx reports bus state (dominant or recessive), once the wake-up filter criteria is met

4.2 Setting up the Hardware using Dual Supply

1. To use the board and device with dual supply, set the SW3 switch to left (on VIOXT).
2. Set the VDD power supply to 5.0 V, and the VIO power supply to 3.3 V.
3. To use the device in Normal mode, set the STBx switches to right.
   - Connect a 0 V - 3.3 V square signal to TXDx, frequency 250 kHz and duty cycle 50%
   - Connect an oscilloscope to CANHx, CANLx, and RXDx terminals
   - Observe CANHx, CANLx, and RXDx signals on the oscilloscope
4. To use the device in Standby mode, set the STBx switches to left.
   - Observe TXDx signal on the oscilloscope. In Standby mode, TXD signal is high
   - Apply CAN signal on CANHx and CANLx
   - RXDx reports bus state (dominant or recessive), once the wake-up filter criteria is met

5 Schematic

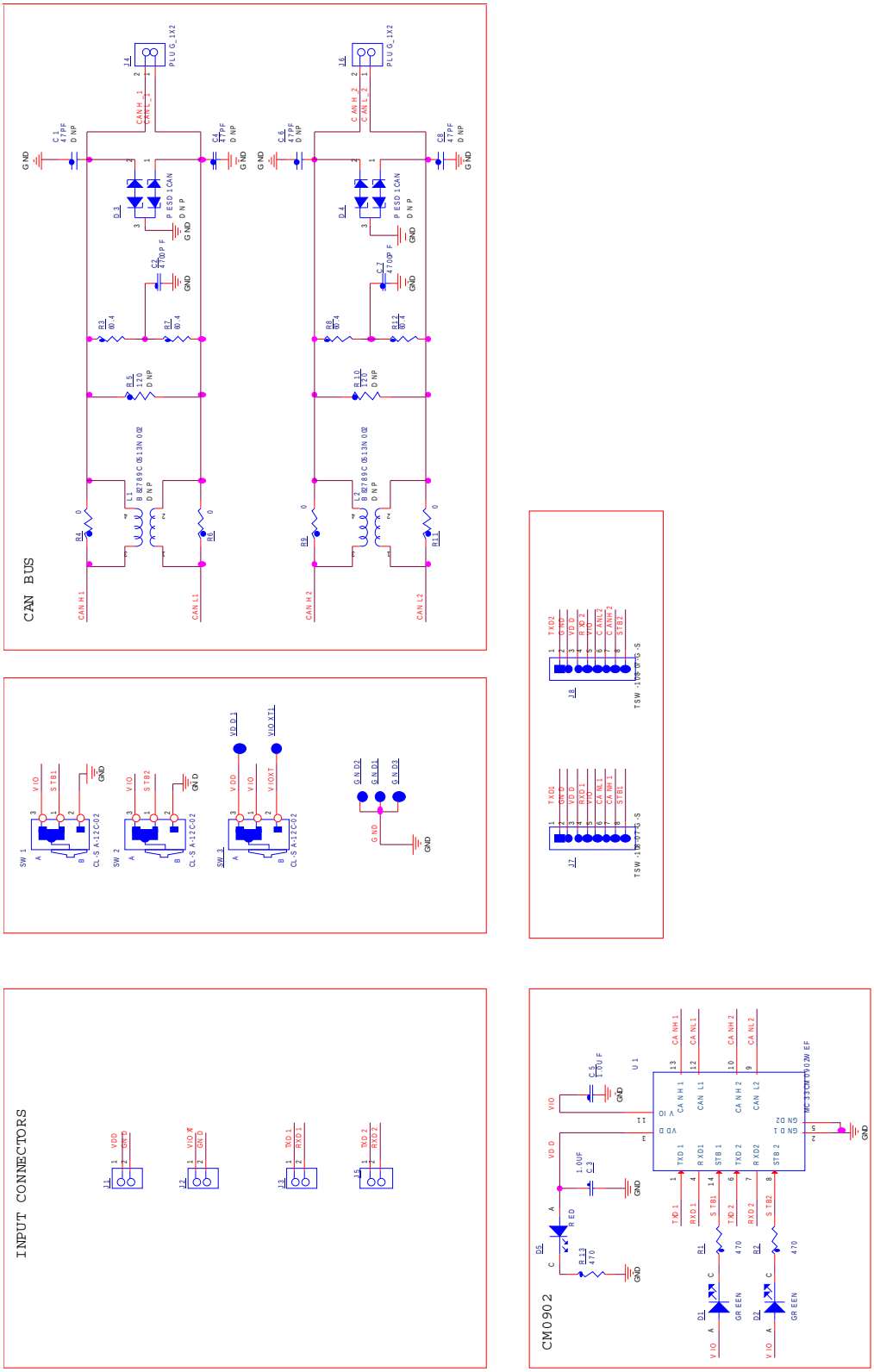

Figure 7. Evaluation Board Schematic

6 Board Layout

6.1 Top Layer Routing

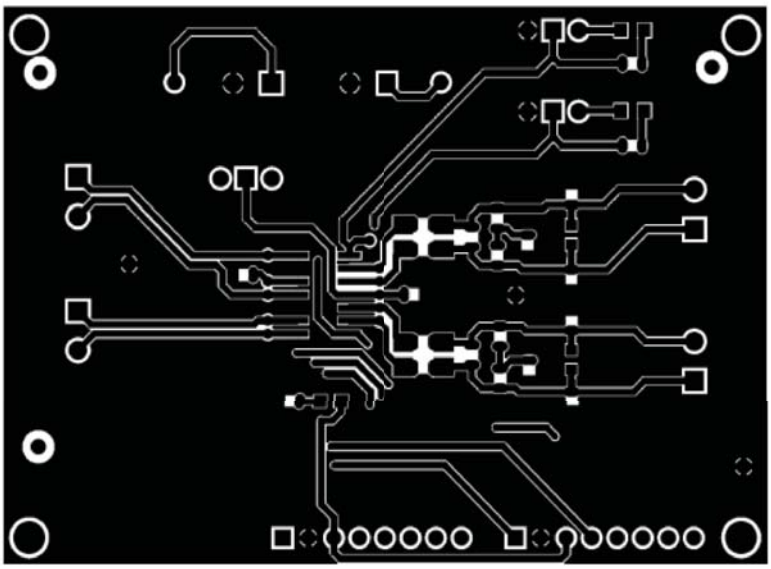

Figure 8. Top Layer Routing

6.2 Bottom Layer Routing

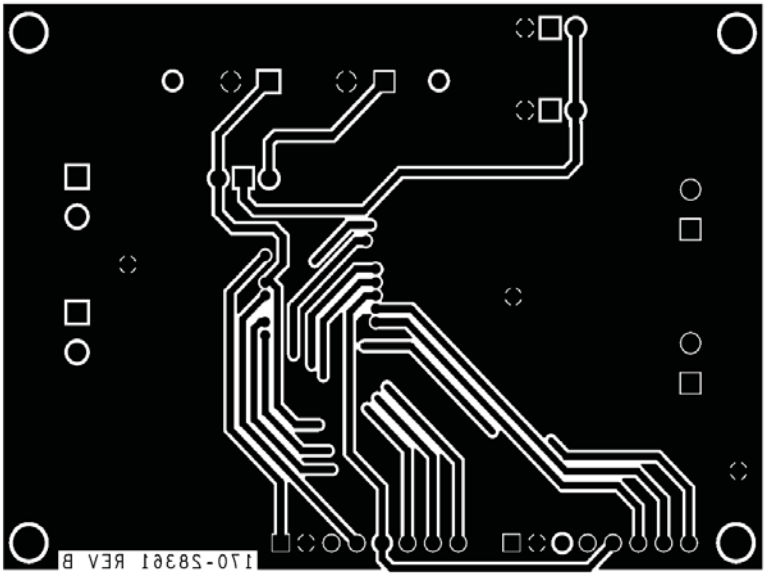

Figure 9. Bottom Layer Routing

Notes: This image is an exception to the standard top-view mode of representation used in this document. It has been flipped to show a bottom view.

7 Bill of Materials

Table 5. Bill of Materials [1]

Item	Qty	Schematic Label	Value	Description	Part Number	Assy Opt
Active Components						
1	1	U1		IC XCVR DUAL HIGH SPEED 4.5-5.5V SO14	MC33CM0902WEF	[3]
Diodes						
2	2	D1, D2	GREEN	LED GRN SGL 25MA 0805	598-8170-107F	
3	1	D5	RED	LED RED SGL 20MA 0805	HSMH-C170	
4	2	D3, D4	PESD1CAN	DIODE BIDIRCAN BUS ESD PROTECTION 200W 24V AEC-Q101 SOT 23	PESD1CAN,215	[2]
Capacitors						
5	4	C1, C4, C6, C8	47 pF	CAP CER 47PF 50V 5% COG 0805	C0805C0G500-470JNE	[2]
6	2	C2, C7	4700 pF	CAP CER 4700PF 25V 10% X7R 0805	C0805X7R150-472KNE	
7	2	C3, C5	1.0 uF	CAP CER 1.0UF 25V 10% X7R 0805	08053C105KAT2A	
Resistors						
8	3	R1, R2, R13	470 Ω	RES MF 470 OHM 1/8W 1% 0805	CR0805-FX-4700ELF	
9	4	R3, R7, R8, R12	60.4 Ω	RES MF 60.4 OHM 1/8W 1% AEC-Q200 0805	CRCW080560R4FKEA	
10	4	R4, R6, R9, R11	0 Ω	RES MF ZERO OHM 1/8W -- 0805	RC0805JR-070RL	
11	2	R5, R10	120 Ω	RES MF 120 OHM 1/8W 5% 0805	RK73B2ATTD121J	[2]
Inductors						
12	2	L1, L2	B82789C0513N002	IND CHK 2X51UH 250MA -30/+50% 1812	B82789C0513N002	[2]
Switches						
13	3	SW1, SW2, SW3	CL-SA-12C-02	SW SPDT SLD 500MA 12V TH	CL-SA-12C-02	
Connectors						
14	6	J1, J2, J3, J4, J5, J6	Plug_1X2	CON 1X2 PLUG SHRD RA TH 3.81MM SP 285H SN 134L	1803277	
15	2	J7, J8	HDR_1X8	HDR 1X8TH 100MIL SP 330H AU 100L	TSW-108-07-G-S	

Table 5. Bill of Materials [(1)] (continued)

Test Points

16	3	GND1, GND2, GND3	Test point black	TEST POINT BLACK40 MIL DRILL 180 MIL TH 109L	5001	
17	2	VDD1, VIOXT1	Test point red		5002	

Notes:

1. Freescale does not assume liability, endorse, or warrant components from external manufacturers that are referenced in circuit drawings or tables. While Freescale offers component recommendations in this configuration, it is the customer's responsibility to validate their application.
2. Do not populate.
3. **Critical components.** For critical components, it is vital to use the manufacturer listed.

8 References

Following are URLs where you can obtain information on related Freescale products and application solutions:

Freescale.com Support Pages	Description	URL
MC33CM0902	Product Summary Page	http://www.freescale.com/webapp/sps/site/prod_summary.jsp?code=MC33CM0902
MC34CM0902	Product Summary Page	http://www.freescale.com/webapp/sps/site/prod_summary.jsp?code=MC34CM0902
KIT33CM0902EFEVB	Tool Summary Page	http://www.freescale.com/webapp/sps/site/prod_summary.jsp?code=KIT33CM0902EFEVB
KIT34CM0902EFEVB	Tool Summary Page	http://www.freescale.com/webapp/sps/site/prod_summary.jsp?code=KIT34CM0902EFEVB
	Analog Home Page	http://www.freescale.com/analog
	Automotive Home Page	http://www.freescale.com/automotive

8.1 Support

Visit www.freescale.com/support for a list of phone numbers within your region.

8.2 Warranty

Visit www.freescale.com/warranty for a list of phone numbers within your region.

9 Revision History

Revision	Date	Description of Changes
1.0	1/2015	• Initial Release

How to Reach Us:

Home Page:
freescale.com

Web Support:
freescale.com/support

Information in this document is provided solely to enable system and software implementers to use Freescale products. There are no express or implied copyright licenses granted hereunder to design or fabricate any integrated circuits based on the information in this document.

Freescale reserves the right to make changes without further notice to any products herein. Freescale makes no warranty, representation, or guarantee regarding the suitability of its products for any particular purpose, nor does Freescale assume any liability arising out of the application or use of any product or circuit, and specifically disclaims any and all liability, including without limitation consequential or incidental damages. “Typical” parameters that may be provided in Freescale data sheets and/or specifications can and do vary in different applications, and actual performance may vary over time. All operating parameters, including “typicals,” must be validated for each customer application by customer’s technical experts. Freescale does not convey any license under its patent rights nor the rights of others. Freescale sells products pursuant to standard terms and conditions of sale, which can be found at the following address: freescale.com/SalesTermsandConditions.

Freescale and the Freescale logo are trademarks of Freescale Semiconductor, Inc., Reg. U.S. Pat. & Tm. Off. SMARTMOS is a trademark of Freescale Semiconductor, Inc. All other product or service names are the property of their respective owners.

© 2015 Freescale Semiconductor, Inc.

Document Number: KTCM0902UG
Rev. 1.0
1/2015